USER MANUAL

Thank you for choosing Better Bathrooms.
Please read this manual before installing your product
and keep for future reference.

better bathrooms

Carina 6mm Quadrant Enclosure

BeBa_28011/BeBa_28012/BeBa_28013/BeBa_28016 /BeBa_28017/BeBa_28018/BeBa_28019/BeBa_28020

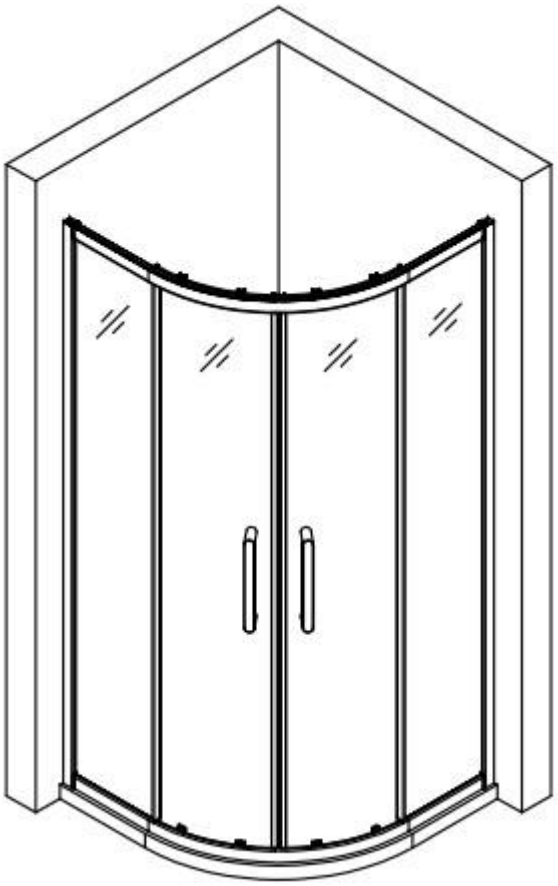

- **Multi-person assembly**
- **Tools required**
- **We always recommend using professional tradespeople to install your product**

2021.8.23

Congratulations on your purchase

And welcome to our growing gang of savvy shoppers

We're on a mission to bring you extraordinary bathroom products, for less. From modern to traditional style ceramics, plus the gorgeous fixtures, fittings and furniture to match. So, you can fall in love with your space every single day.

As one of the UK's largest independent bathroom stores, we've received countless awards; including the National Business Awards UK, the Digital Entrepreneur Awards and being placed on The Sunday Times Fast Track 100.

We hope your new product goes above and beyond your expectations. However, should any problems occur, please:

- log in to your account and contact our customer services team via your self-serve portal –betterbathrooms.com/CustomerAccount/Login

- contact us via betterbathrooms.com/content/contact-us

Important information

- Please read these instructions thoroughly and retain for future reference
- Manufactured to BS EN 14428
- Please check for pipes and cables before drilling
- Please check for damage prior to installation

Parts / Diagrams

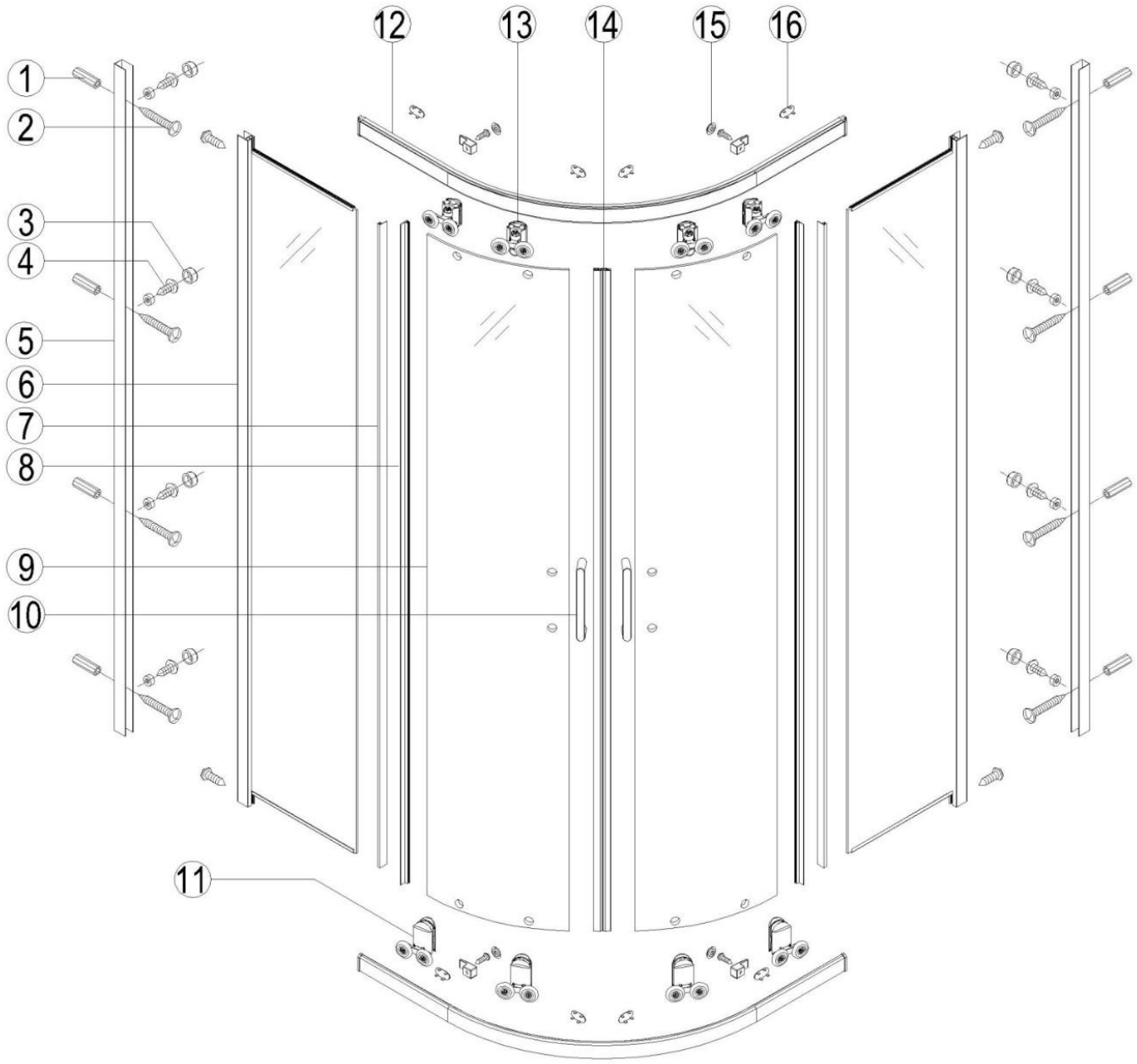

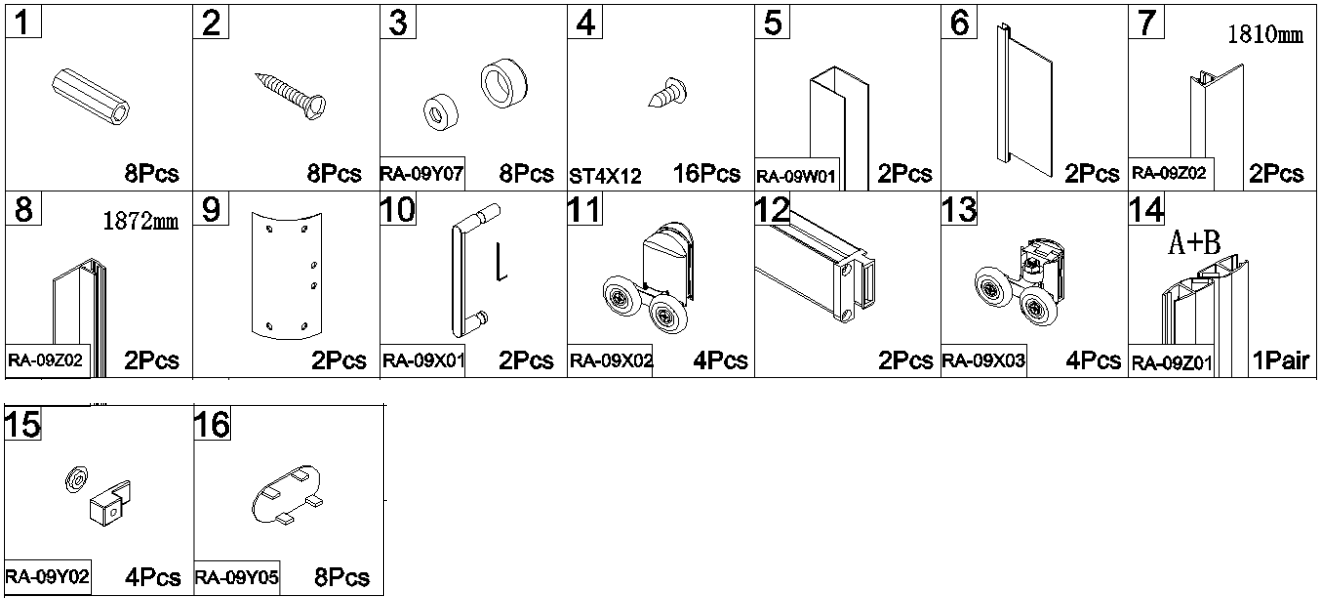

Tools required

(Tools not provided)

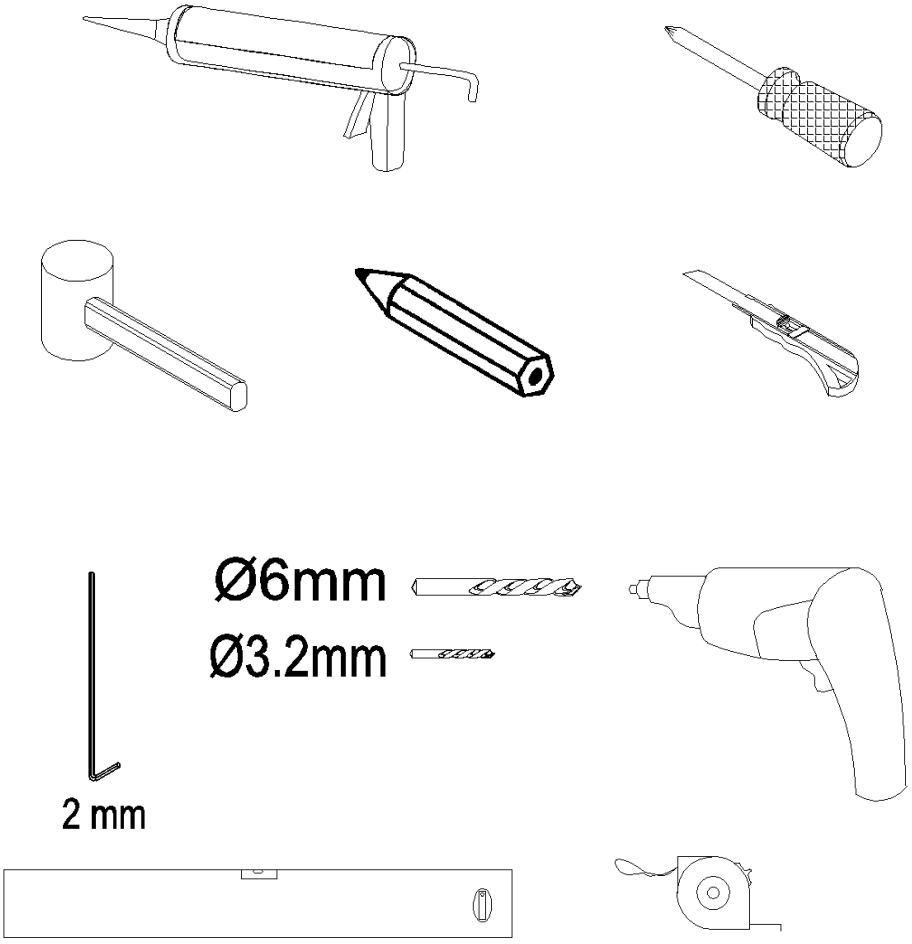

Installation

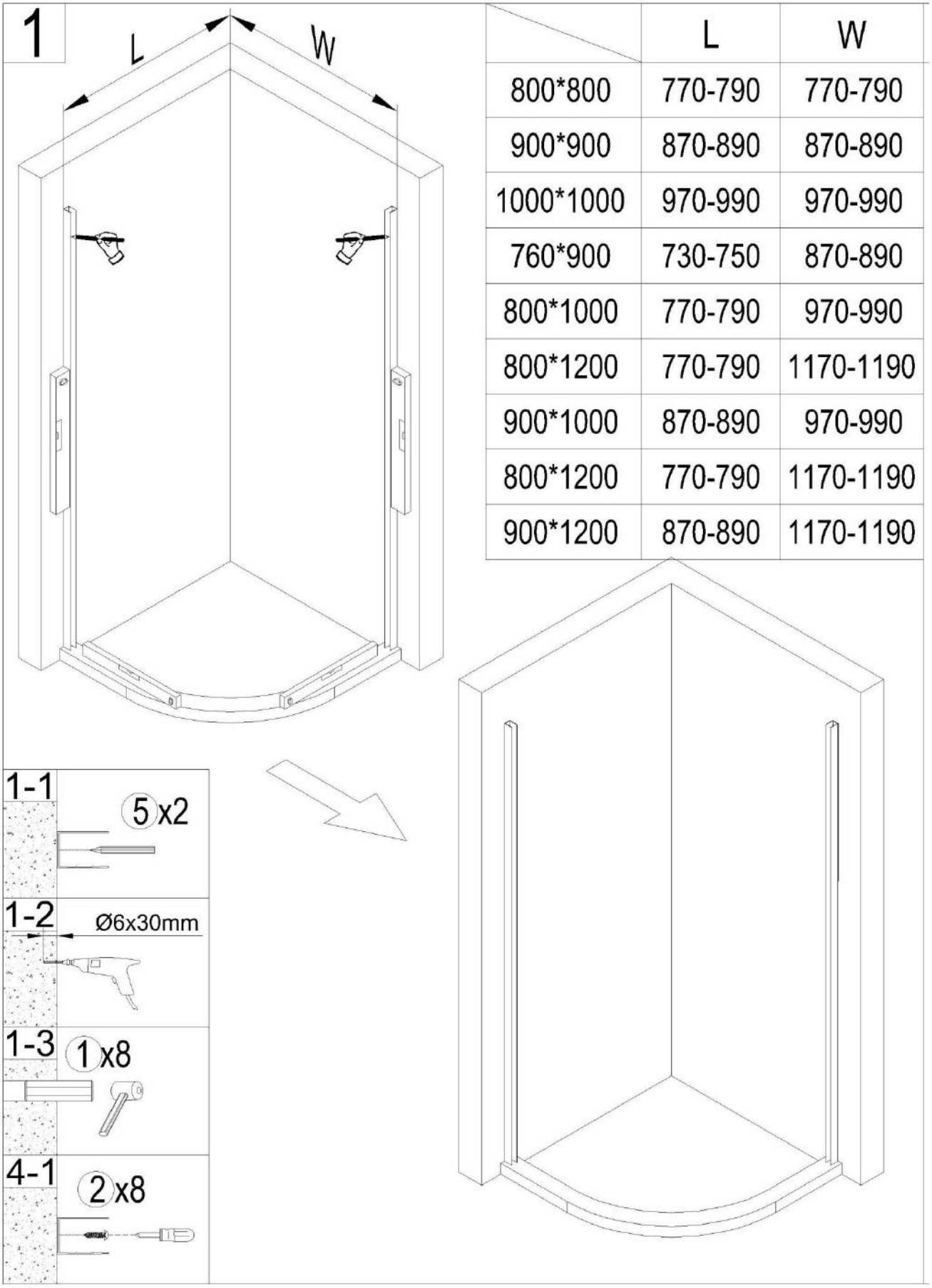

	L	W
800*800	770-790	770-790
900*900	870-890	870-890
1000*1000	970-990	970-990
760*900	730-750	870-890
800*1000	770-790	970-990
800*1200	770-790	1170-1190
900*1000	870-890	970-990
800*1200	770-790	1170-1190
900*1200	870-890	1170-1190

2

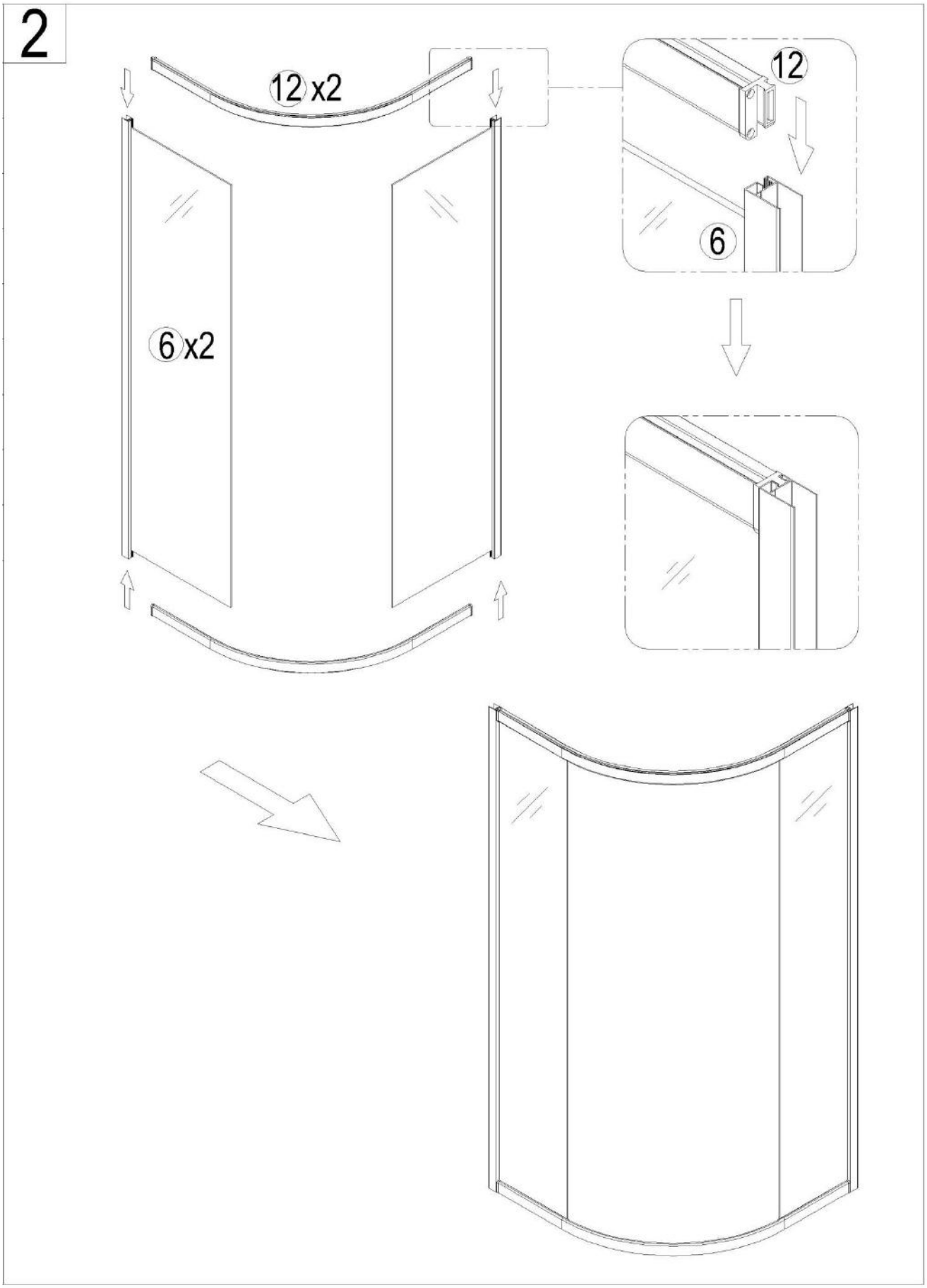

3

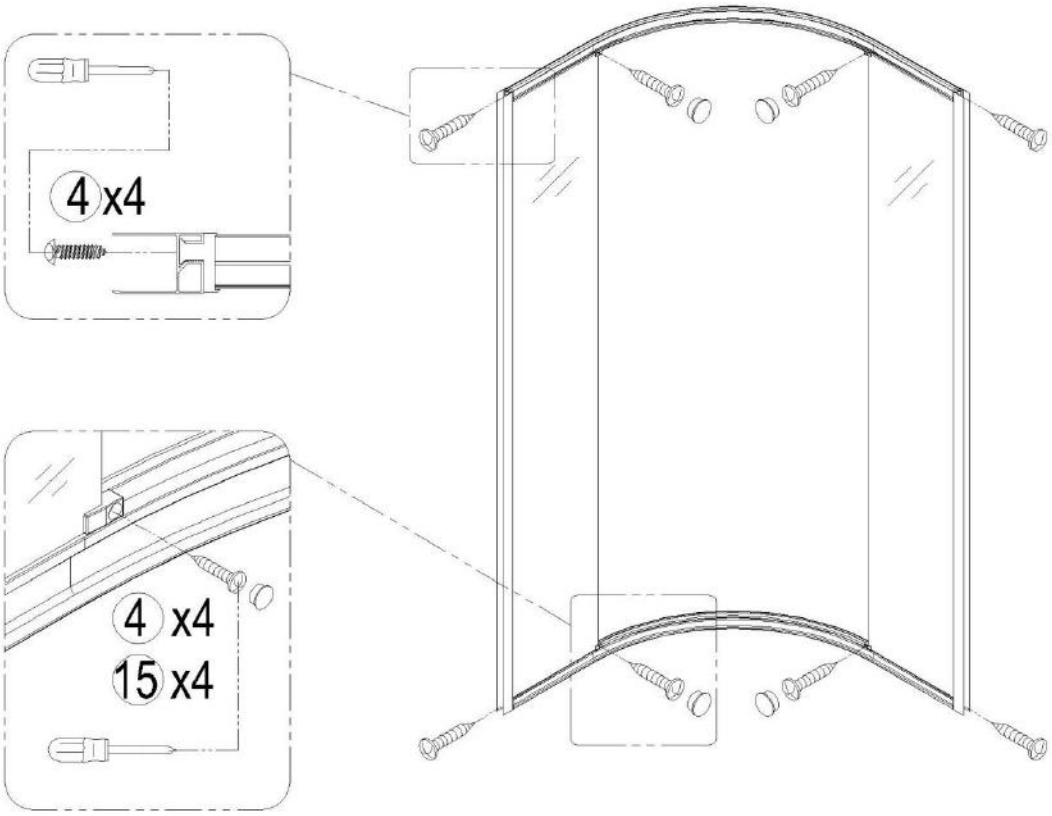

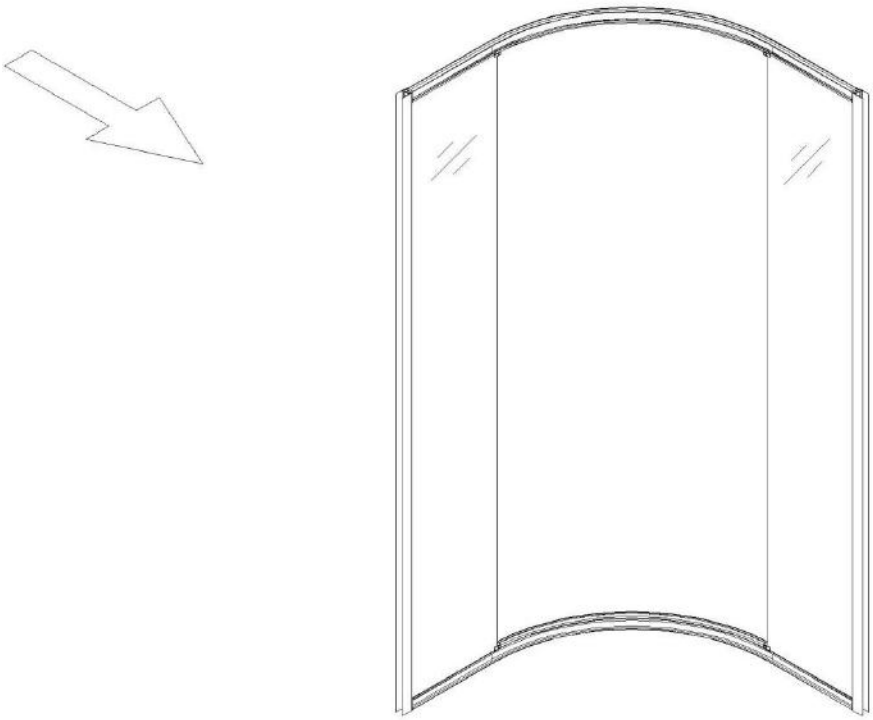

4

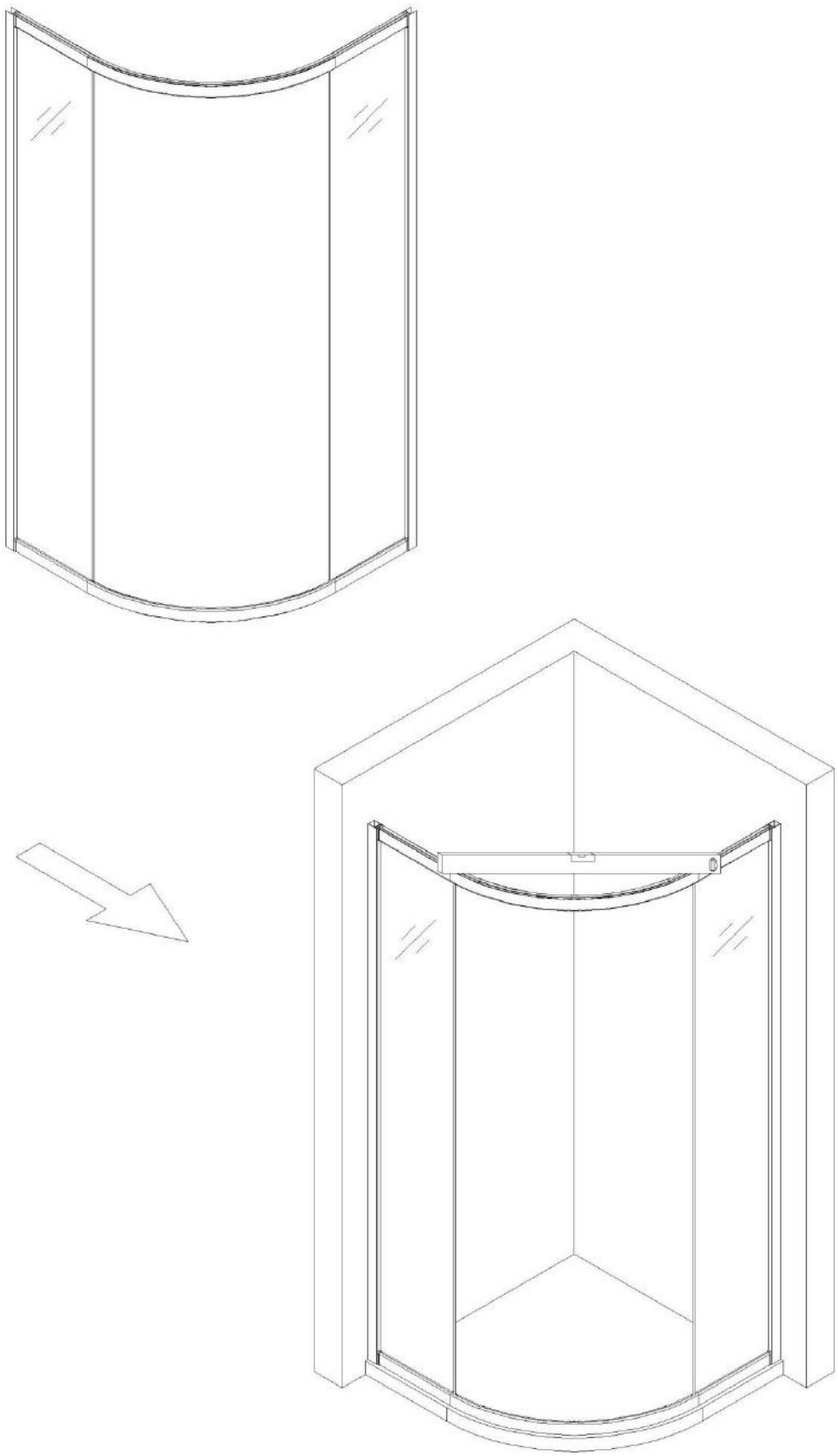

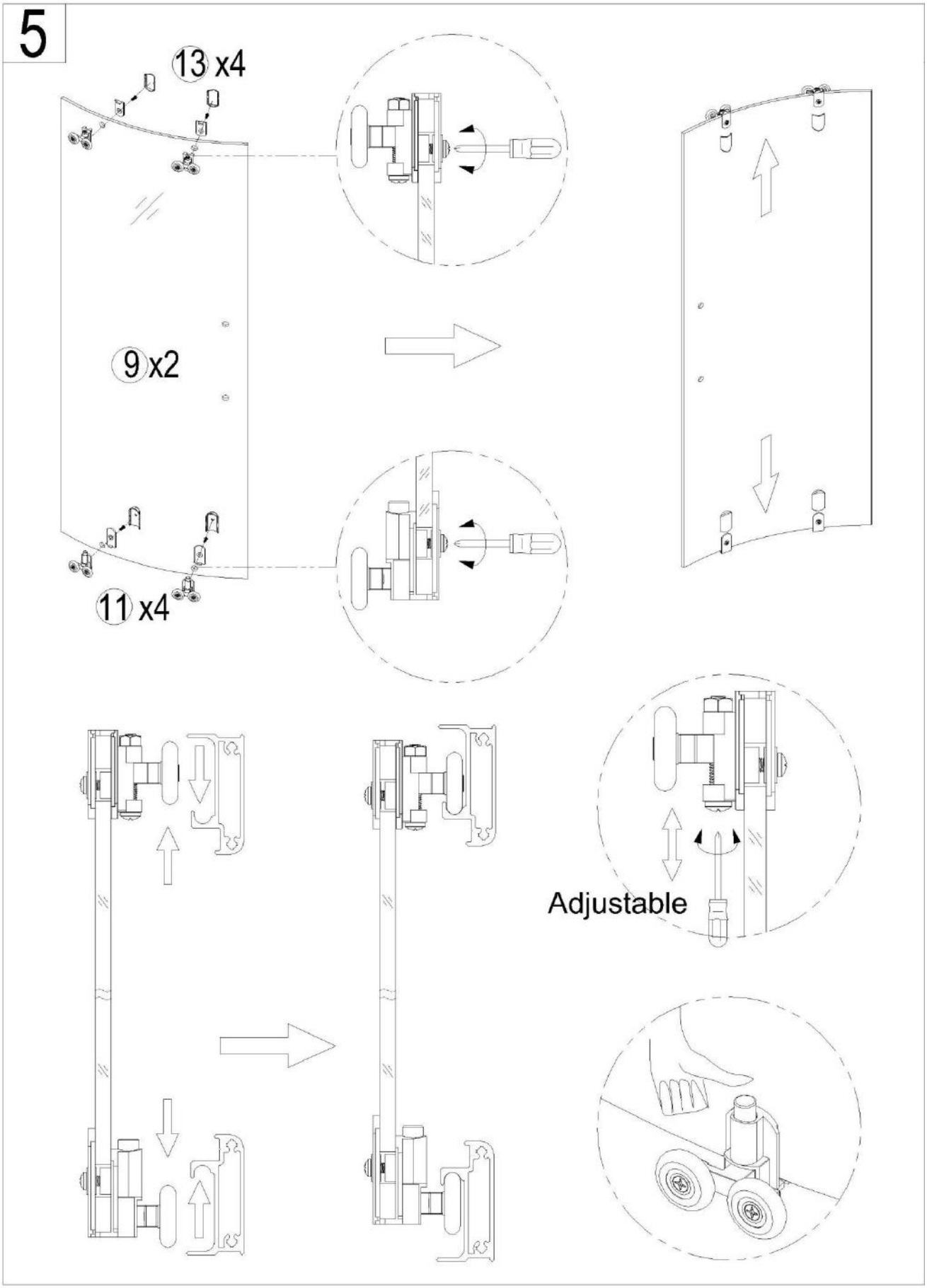
5
13 x4
9 x2
11 x4
Adjustable

6

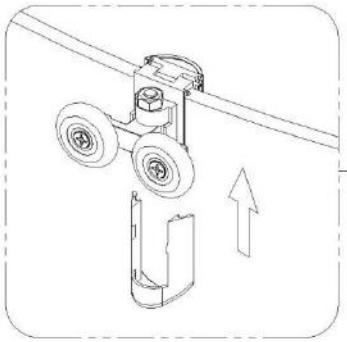

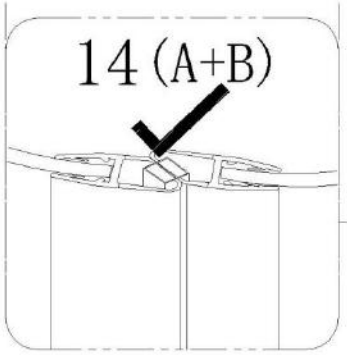

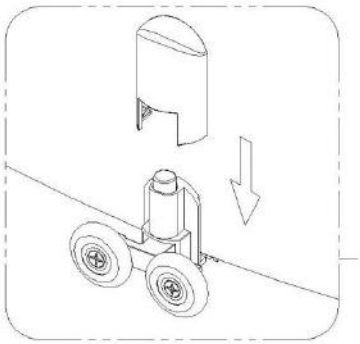

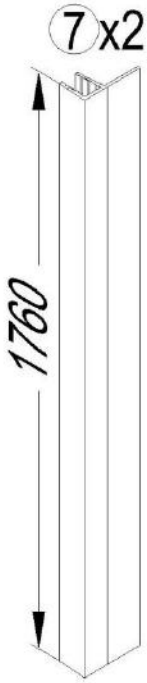

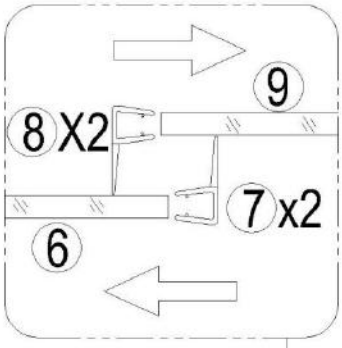

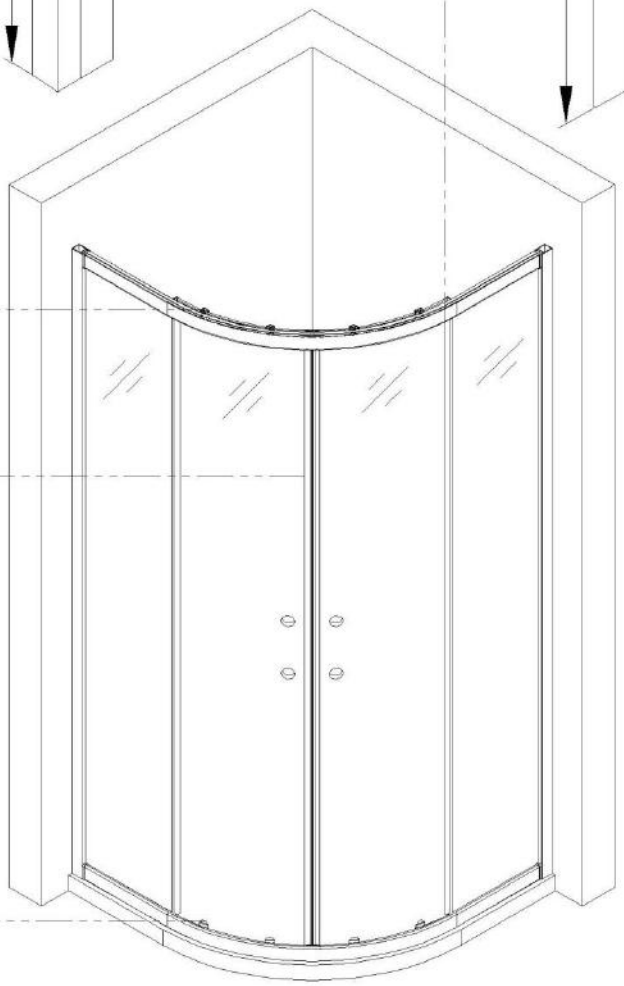

Important:

Step A: Locate the rollers into the top and bottom rails

Step B: Please adjust the top roller up and down with the screw shown below using a screwdriver

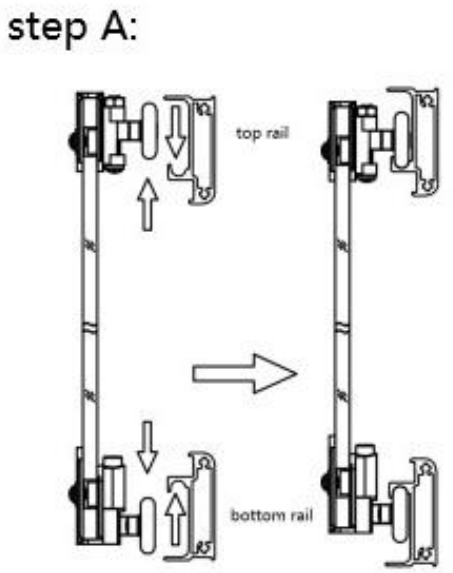

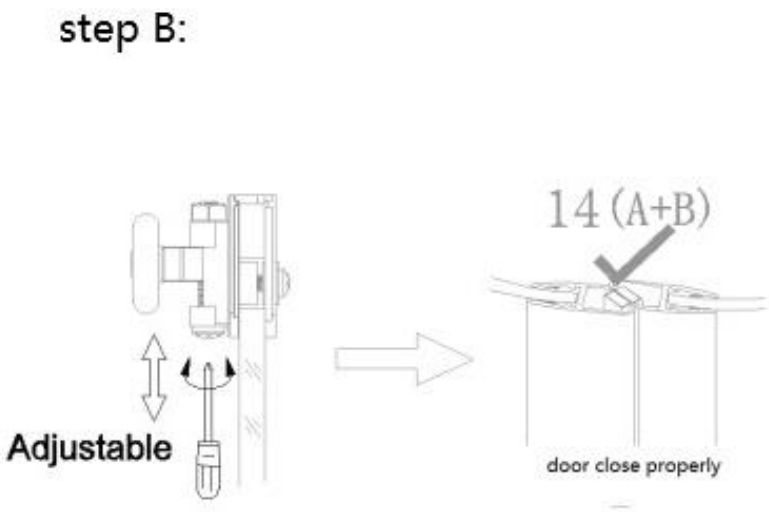

7

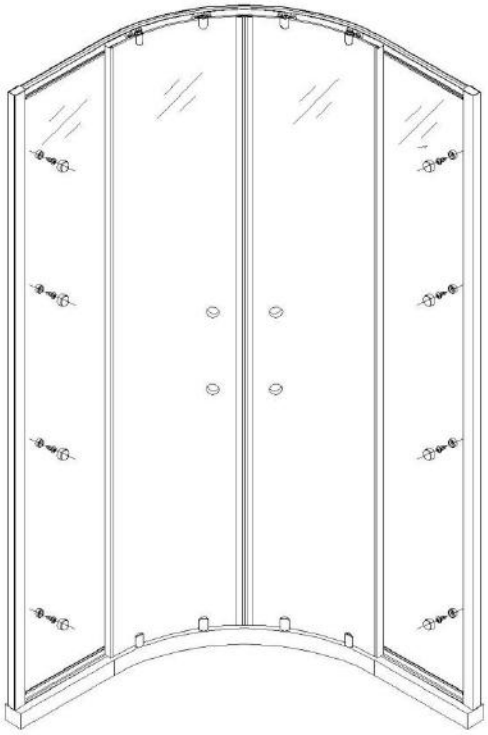

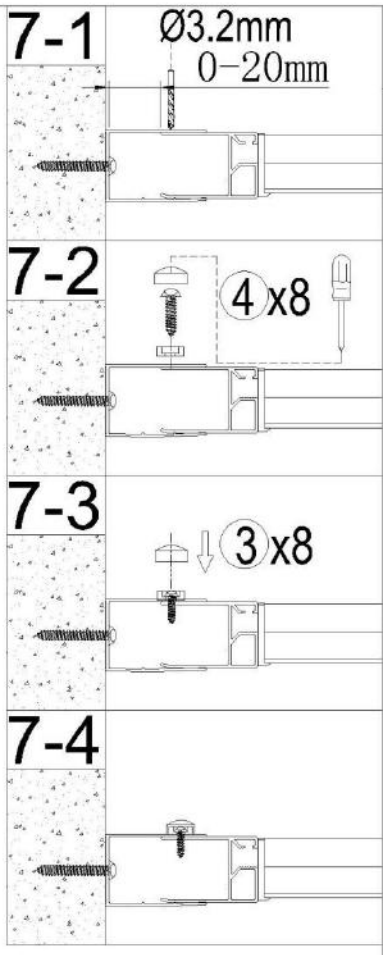

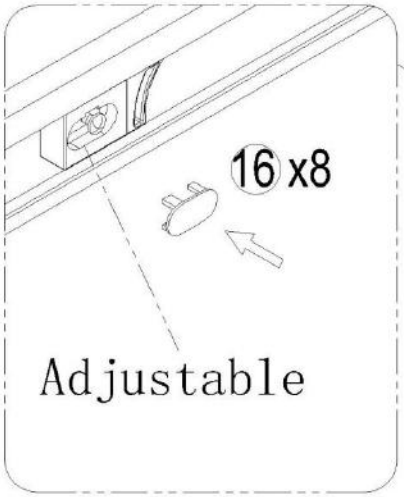

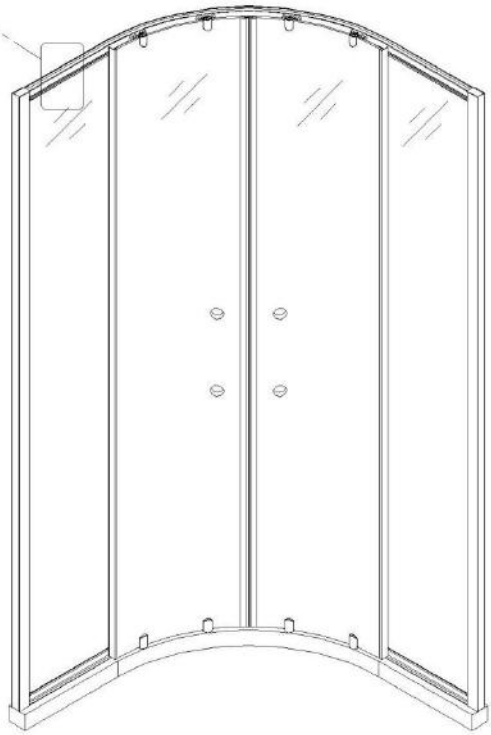

8

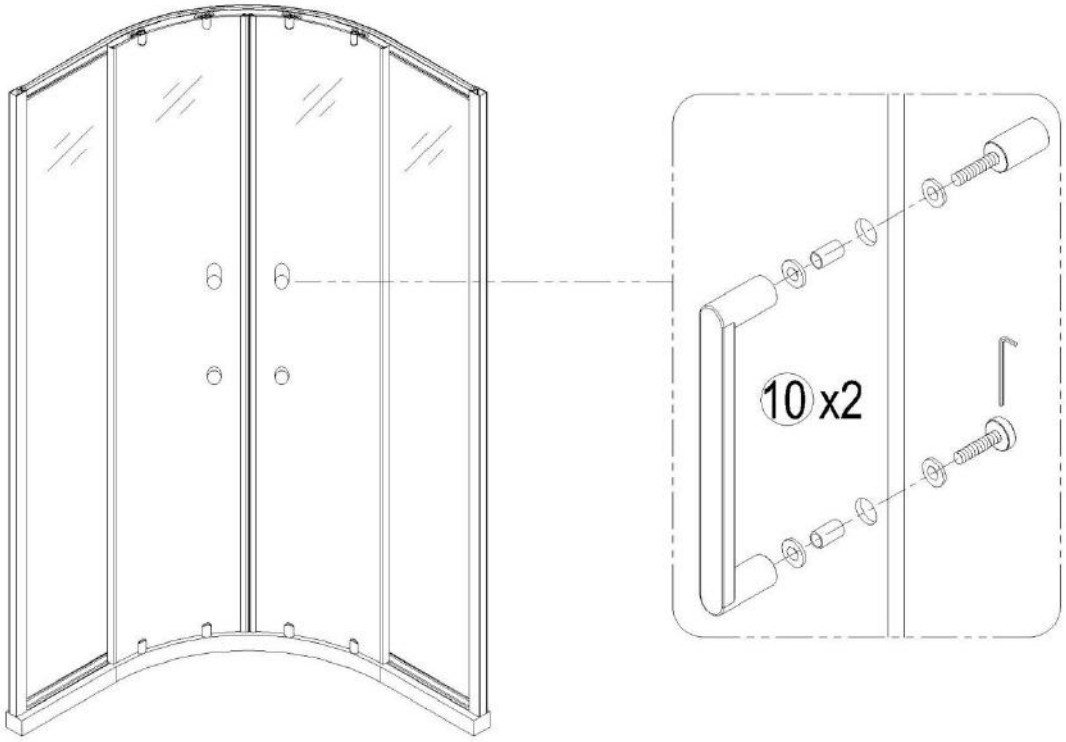

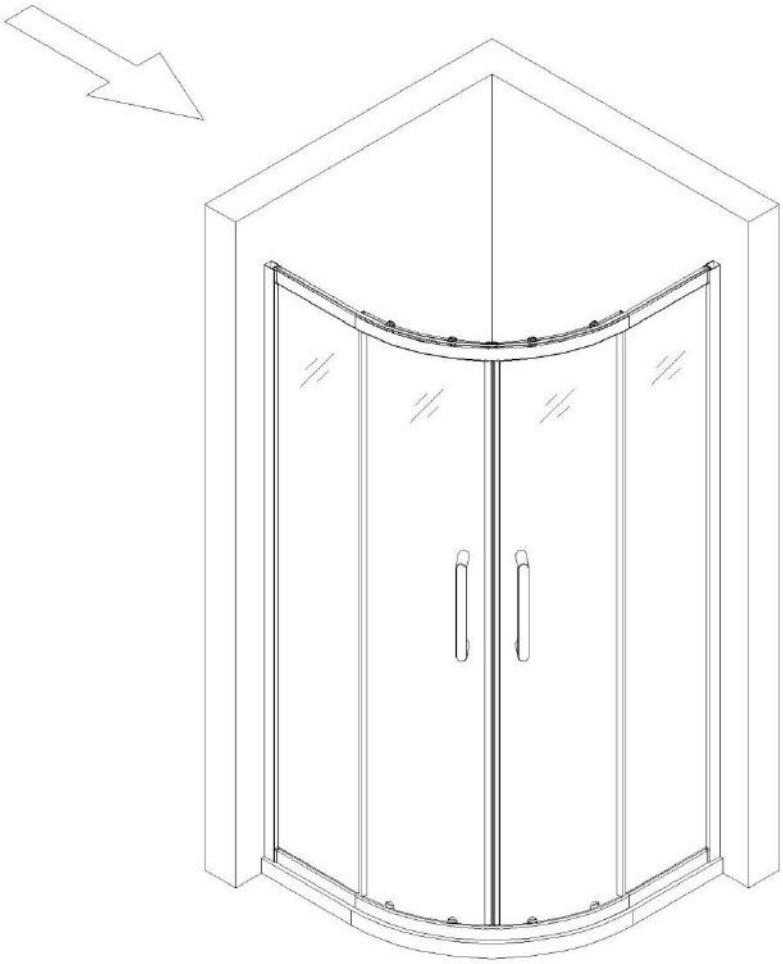

9

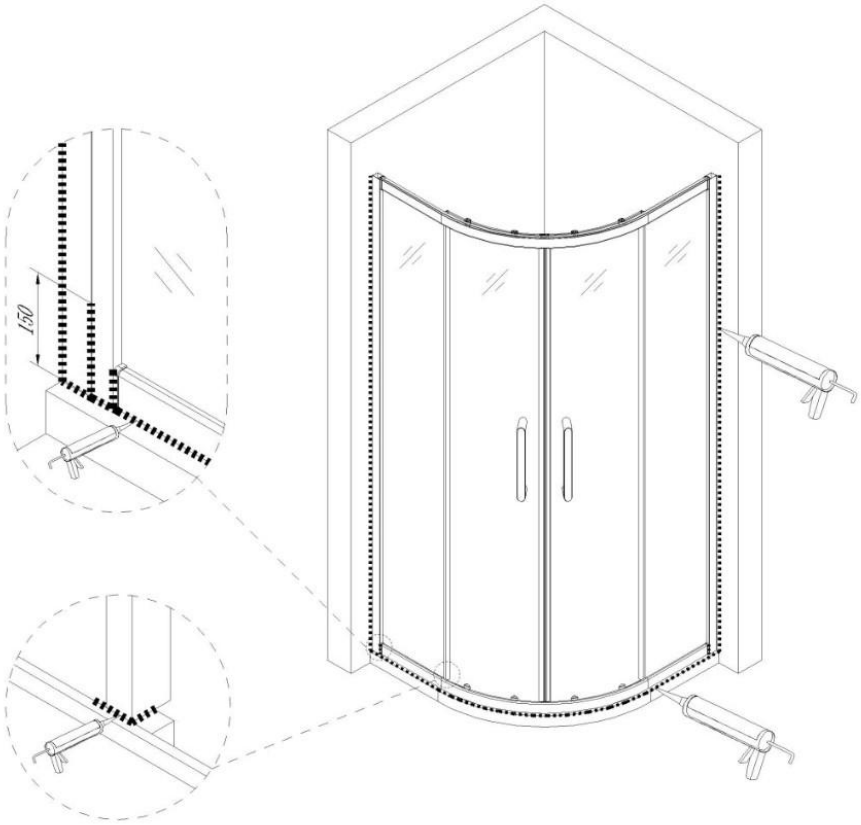

Care Instructions:

Do not use your shower enclosure within 24 hours of assembly . Do not use caustic cleaning products or abrasive material when cleaning your shower enclosure.

Cleaning

All parts of the product shall be cleaned with a cloth soaked in neutral detergent soapy water, Please do not use sharp tools such as blades to clean the shower door.

Please do not use strong detergent, alcohol or any abrasive cleaning substances to clean the shower door if the stain is serious, a low concentration of vinegar can be used, but must be rinsed with clean water afterwards.

For more information

- visit betterbathrooms.com
- email customerservices@buyitdirect.co.uk
- call 0330 390 3062
- write to Trident Business Park, Neptune Way, Huddersfield, HD2 1UA

better bathrooms

Part of the BuyItDirect Group

ASSEMBLY GUIDE

SLIMLINE
SHOWER TRAY
OA39/196

Components

SHOWER TRAY (WASTE NOT INCLUDED)

(TRAY IMAGES FOR ILLUSTRATION PURPOSES ONLY **ASSEMBLY GUIDE APPLIES TO ALL SLIMLINE SHOWER TRAYS**)

Tools and additional required

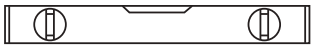

Spirit Level

Silicone

Drill

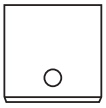

Hole Cutter

Pencil

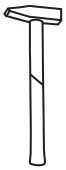

Hammer

Before you start...

Check the pack and make sure all the components are included. When you are ready to start make sure you have all the right tools to hand, plenty of space and a clean dry area for building. Don't rush, read the instructions first and run through the assembly sequence before you begin.

ASSEMBLY INSTRUCTIONS: IMPORTANT PLEASE READ

Please read these instructions carefully. If in doubt please contact a qualified plumber. Failure to adhere to these instructions will invalidate the manufacturer's guarantee and no responsibility will be accepted for any loss or damage.

This does not affect your statutory rights.

Please inspect this product immediately for damage, size and colour. Do not install if not satisfied, as no claims for consequential damage will be accepted.

We recommend that 2 persons install the tray. It must be considered a 2 manlift at all times.

Ensure that the tray top surface is compatible with the intended shower enclosure taking into account loss of dimension from the tiles. This is particularly if you have elected to recess the edge of the tray into adjacent walls.

Do not use putty, mastic or solvent based sealers in direct contact with this product. Use of these will damage the tray and render the manufacturer's guarantee invalid.

We strongly recommend the use of a fast flow waste with this product.

Suspended floor installation

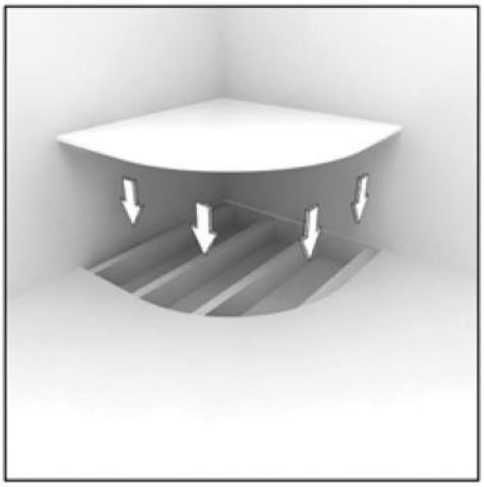

1 If the tray is to be installed onto a suspended floor, the total area of the tray (or bigger) must be removed and replaced with a single piece of birch ply or similar (min 18mm thick). If using a tray with a tiling upstand allowance must be made for recessing the tray into the adjoining walls to allow tiling onto the surface of the tray.

N.B. On concrete floors the ply is not required. A trench for the trap and waste pipe will be required which gives sufficient access for connecting the plumbing once the tray is installed.

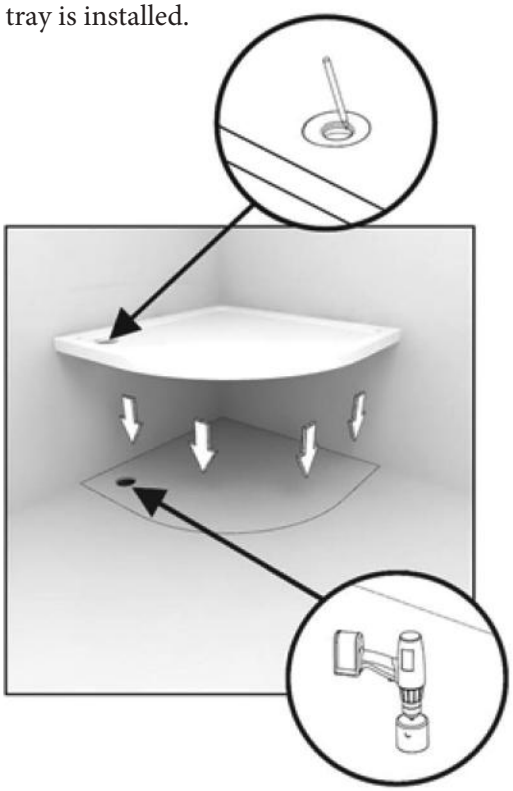

2 Cover the base with a full screed of a weak mix of sand and cement (5:1 ratio) or an alternative cement based tile adhesive. Spread the screed evenly where the base of the tray will sit, do not allow the mix to block the waste hole in the ply where applicable. Ensure the sufficient thickness to cover all voids to allow leveling and full support to the tray base and sides.

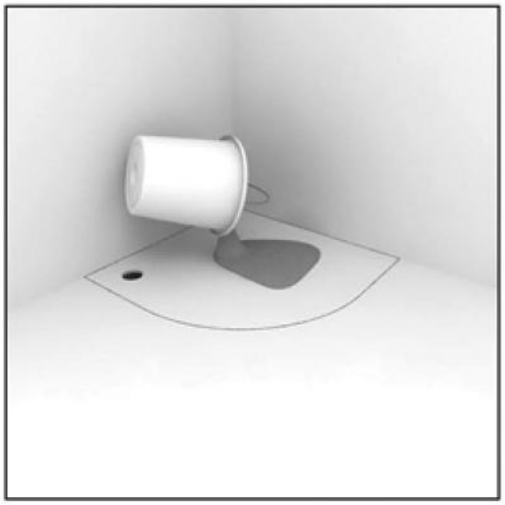

3 Fit the waste to the tray (as per the manufacturer's instruction) and position the tray on the ply & cement/ sand mix. Be careful not to obstruct the waste under the tray as this may cause leakage. Ensure the tray is positioned against both walls. Ensure the tray is level using a spirit level. Connect the waste pipe to the waste and water, test the connections for leaks and tray water retention. Allow the cement/sand mix to set before commencing any further.

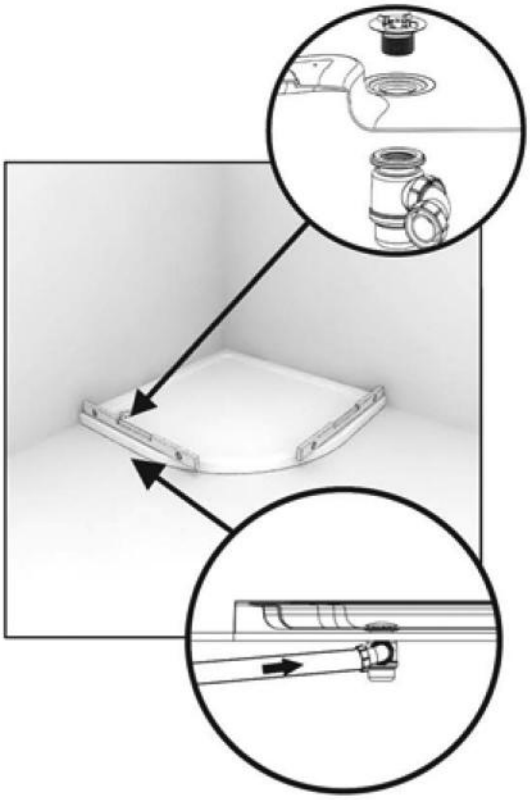

4 **Prior to fitting the tray, please check that it drains correctly.**

Level the tray around the rim, place a bowl under the tray, pour in water.

As the tray skin is slip resistant, large droplets of water will remain but large pools should not be evident.

Fit the waste to the tray (as per manufacturer's recommendation) and position the tray on the ply and cement/sand mix. Be careful not to obstruct the waste under the tray as this may cause leakage. Ensure the tray is positioned against both walls. Ensure the tray is level using a spirit level. Connect the waste pipe to the waste and water test the connections for leaks and tray water retention. Allow the cement/sand mix to set before commencing an further.

No claims can be made for faulty trays once the item has been installed. Please Check your tray before installation.

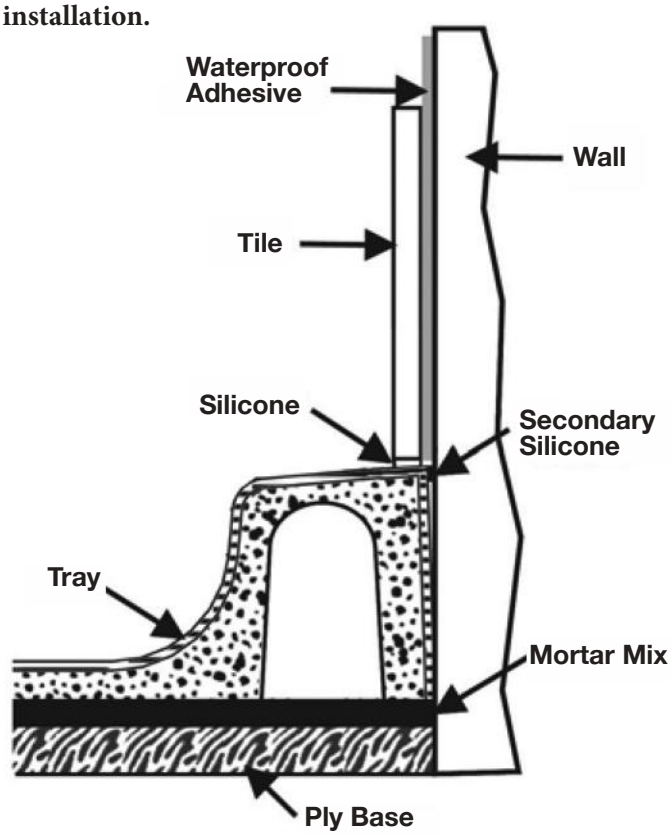

5 Once the mortar mix is set, apply a second-ary silicone seal between the tray and wall. Tile down onto the tray on each wall using suitable waterproof adhesive then grout the tiles using anti-fungal grout.

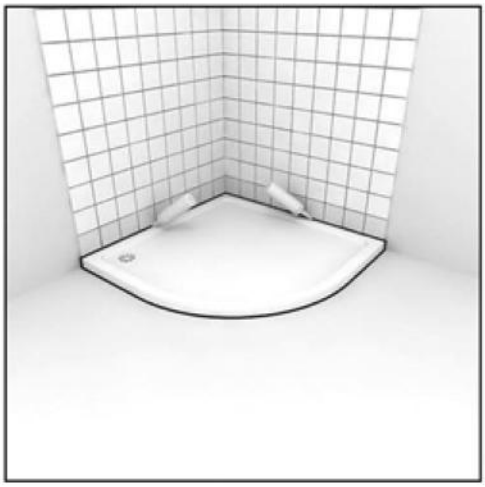

6 Make sure that all surfaces are clean, dry and dust free, then generously seal the joint between the tray and tiles and tray to floor with an anti-fungal silicone sealant. Ensure the silicone and grout is set before fitting the enclosure. We strongly recommend leaving for at least 48 hours.

Solid floor installation

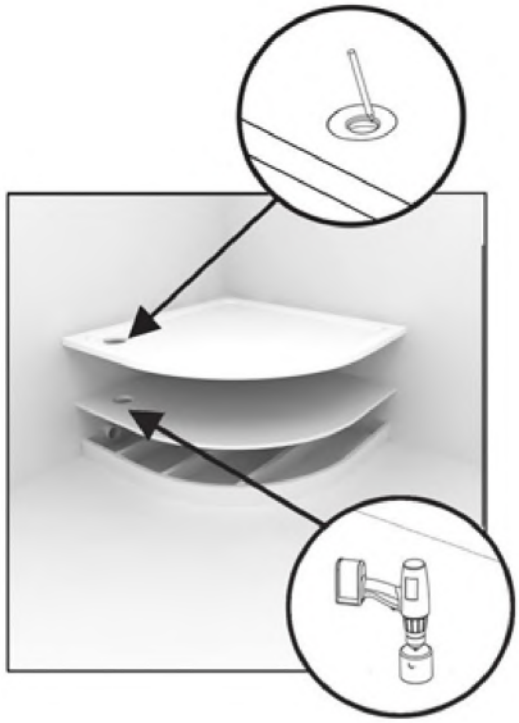

1 A wooden plinth to suit the base of the tray needs to be constructed. Allow adequate space below the plinth for the waste. Cut and fit an 18mm marine ply board to fit the plinth. Position the tray on the plinth and mark through the waste hole of the tray using a pencil.
Cut a hole in the ply at an appropriate size using a drill and hole cutter to suit the waste. The hole should be sufficient to allow the waste unit to tighten onto the base of the tray and not the ply.

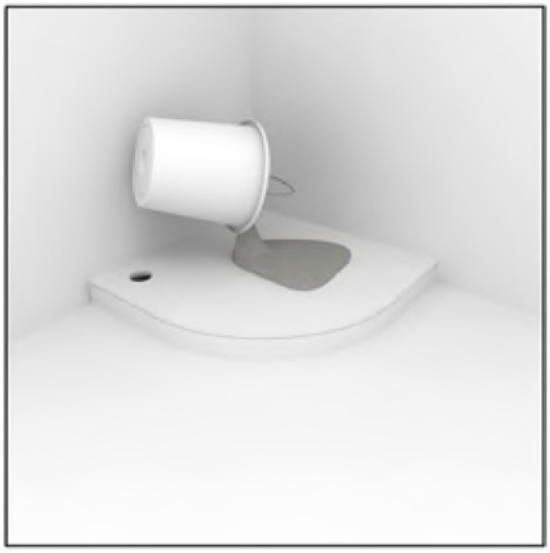

2 Cover the base with a full screed of a weak mix of sand and cement (5:1 ratio) or an alternative cement based tile adhesive. Spread the screed evenly where the base of the tray will sit, do not allow the mix to block the waste hole in the ply where applicable. Ensure the sufficient thickness to cover all voids to allow leveling and full support to the tray base and sides.

3 **Prior to fitting the tray, please check that it drains correctly.**

Level the tray around the rim, place a bowl under the tray, pour in water.

As the tray skin is slip resistant, large droplets of water will remain but large pools should not be evident.

Fit the waste to the tray and position the tray on the ply and cement/sand mix. Be careful not to obstruct the waste hole under the tray as this may cause leakage. Ensure the tray is positioned against both walls. Ensure the tray is level using a spirit level.

4 Connect the waste pipe to the waste and water test the connections for leaks and tray water retention. Allow the mix to set before commencing any further.

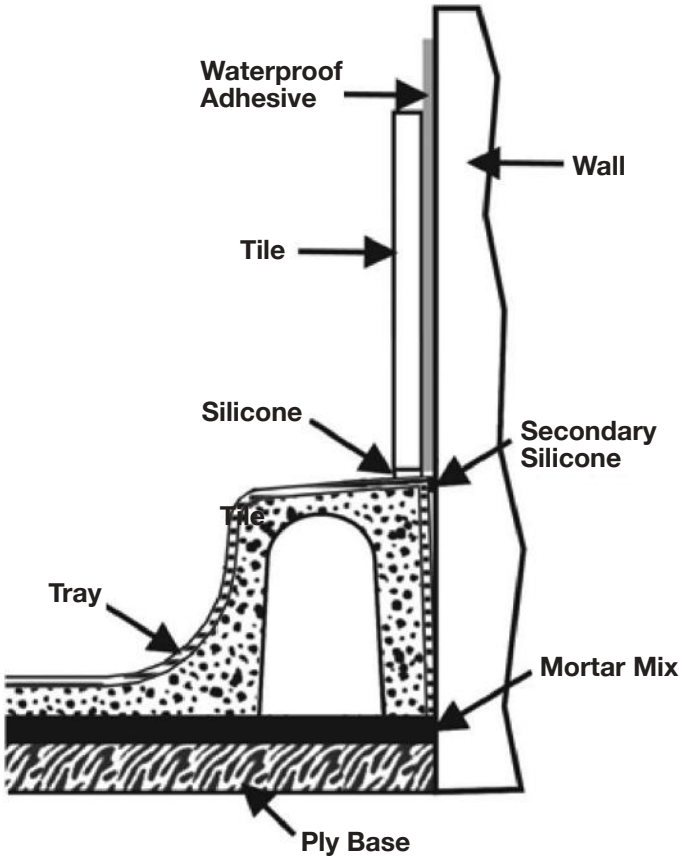

5 Once the mortar mix is set, apply a secondary silicone seal between the tray and wall. Tile down onto the tray on each wall using suitable waterproof adhesive then grout the tiles using anti-fungal grout.

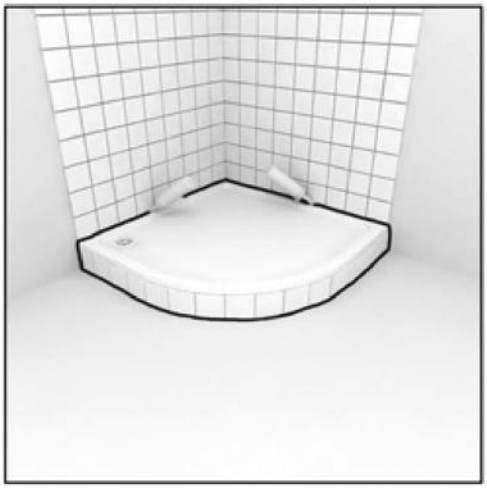

6 We recommend that you tile the plinth using the same method as used for the wall tiling. Make sure that all surfaces are clean, dry and dust free, then generously seal the joint between the tray and tiles (refer to step 5 image for more detail), tray to plinth and plinth to floor with an anti-fungal silicone sealant. Allow the silicone and grout to set before fitting the enclosure.

We strongly recommend leaving for at least 48 hours.

IMPORTANT

A complete watertight seal is essential, the floor and or the marine ply support could be damaged if water penetrates through.

Raised Tray Installation Instructions

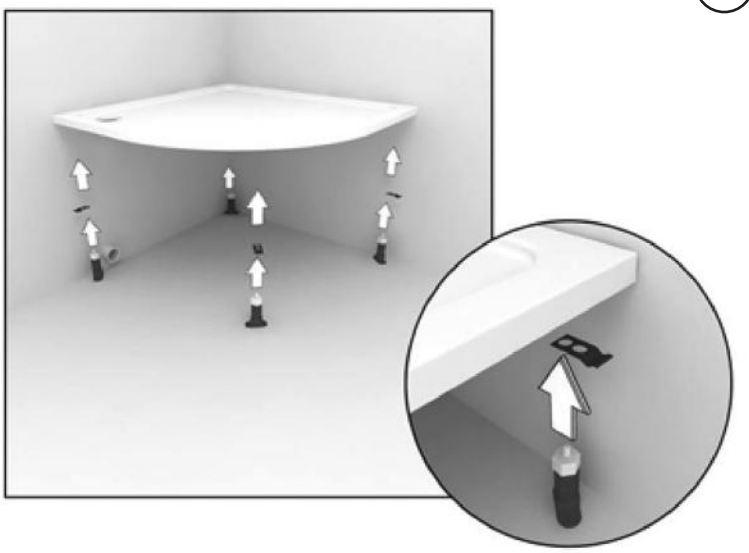

1 Fix the legs and panel clips (1 per leg except on rectangular/square tray corners where 2 are needed) to the base of the tray by screwing the leg through the clip(s) and into the brass inserts which are installed into the base of the tray as standard, to give an evenly supported structure.

2 Adjust the height of the legs to ensure that the cover panel(s) will fit and that the shower tray is level.

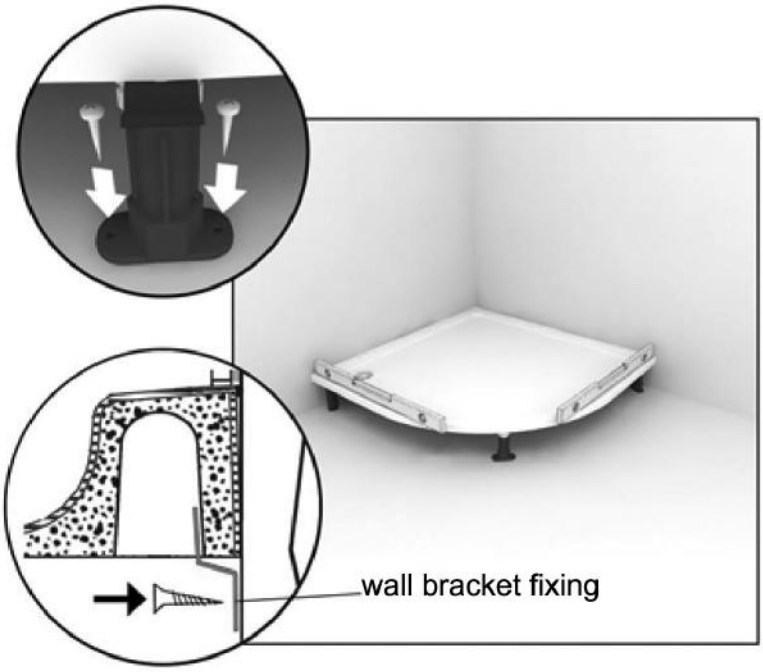

3 Level the tray around the rim, place a bowl under the tray, pour in water.

As the tray skin is slip resistant, large droplets of water will remain but large pools should not be evident.

Fit the waste to the tray(as per manufacturers recommendation). We recommend the use of a fast flow waste with this tray.

Be careful not to obstruct the waste hole under the tray as this may cause leakage. Ensure the tray is positioned against both walls. Ensure the tray is level using a spirit level. Connect the waste pipe to the waste and water test the connections for leaks and tray water retention.

Once you are happy with the installation position, fasten the legs to the floor with suitable screws (not included). Use the wall bracket fixings provided to secure the tray to the wall(s).

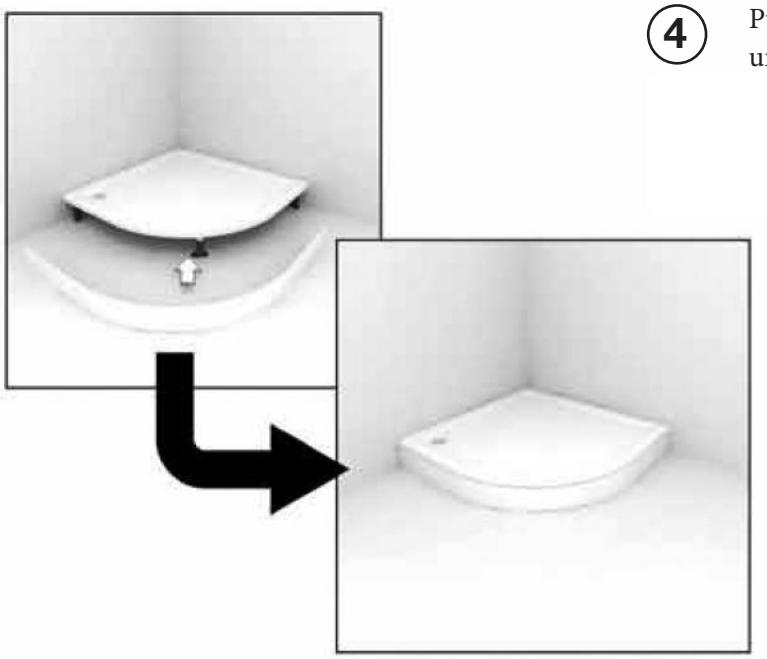

4 Push the cover panel(s) into place using the panel clips under the lip of the tray to secure.

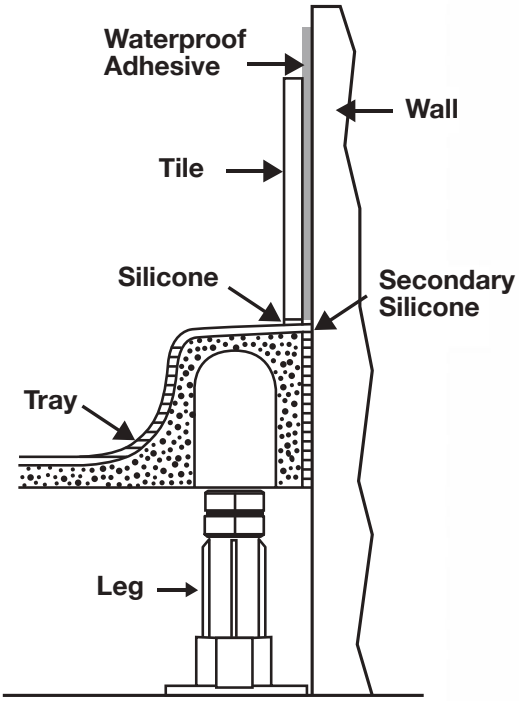

5 Once in position, apply a secondary silicone seal between the tray and the wall. Tile down onto the tray on each wall using suitable waterproof adhesive then grout the tiles using anti-fungal grout. Then silicone around the areas where the tray meets the tiled wall.

AFTERCARE INSTRUCTIONS

A After use the tray must be washed out with soap and water or a cleaner that is recommended for use with plastics, a soft bristle brush may be used for crevices, finish off by drying with a soft clean cloth.

B Under no circumstances should harsh detergents, scouring powders, bleaches or solvent based products be allowed to come into contact with the surface of the tray.

C If after use the shower tray is not cleaned as recommended minerals present in some water supplies may stain the shower tray. This staining is cosmetic only and should not affect the performance of the shower tray.

D Prolonged contact with oil based products can, in some cases cause stress cracking of the shower tray surface, cleaning the shower tray as detailed in aftercare instructions part A will reduce the risk but not alleviate it.

E If the shower tray is to be used in conjunction with a water softener, it is recommended that the advice of the relevant water authority is sought, requesting information on the possibility of the treated water leaching sediment from existing pipe work, which in turn can leave deposits on the surface of the shower tray.

For help and assistance call Cavalier Marketing Ltd: Tel 01535 613830 Fax: 01535 613831

90mm Shower Waste
Installation & Assembly Instruction

1. Trap Assembly

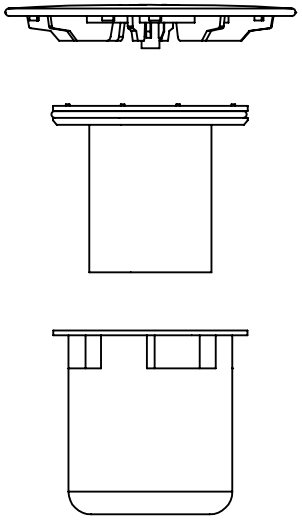

This waste provides a flow rate greater than 24L per minute under a 15mm water load. The flow rate can be seriously impaired if an adequate fall is not maintained throughout the length of the waste pipe.

Install the trap into the shower tray by assembling A, B, C & D as illustrated.

Connect the trap outlet (D) to waste pipe ensuring that the pipe is adequately supported. Test the installation.

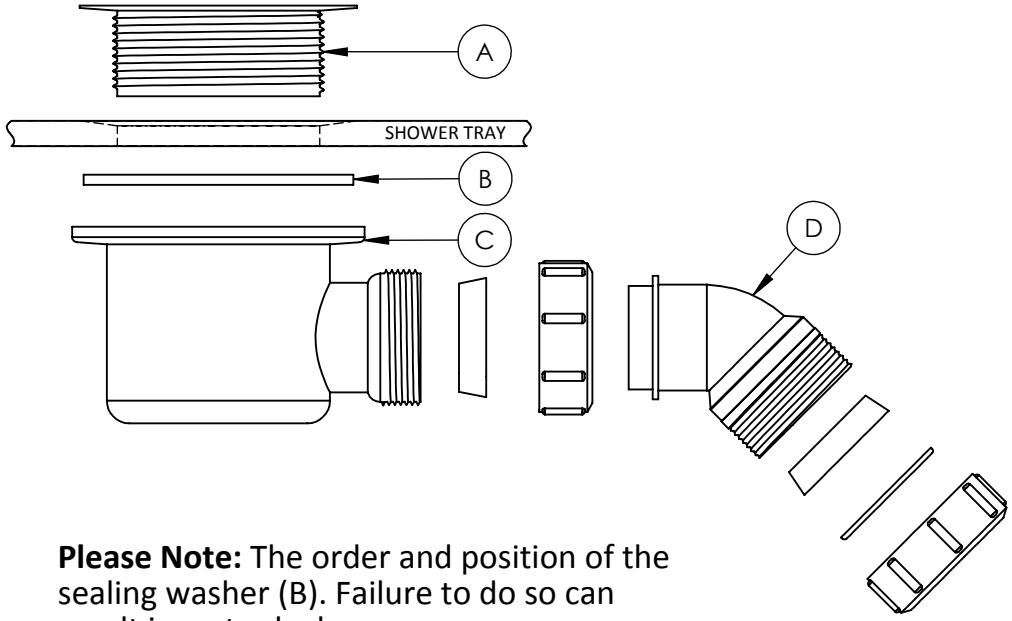

Please Note: The order and position of the sealing washer (B). Failure to do so can result in water leakage.

2. Trap Fitting

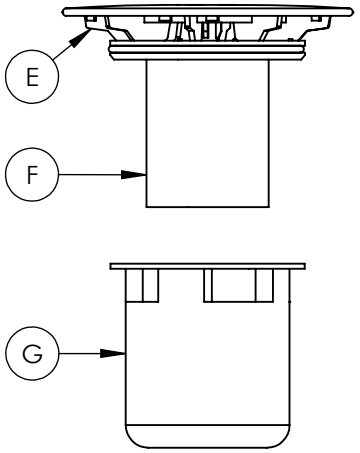

Insert the cup and trap (F&G). Push down firmly to ensure the trap is in the the bottom position.

Note: If silicone sealant is used, it should be a neutral sealant and not an acetoxy sealant.

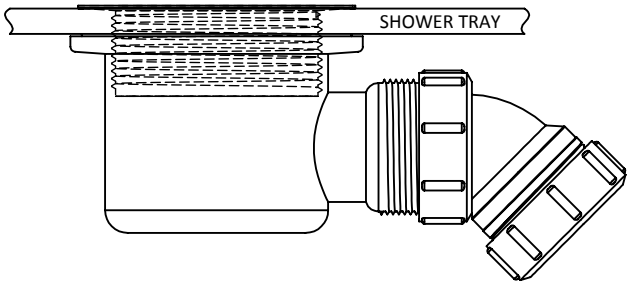

3. Completed Assembly
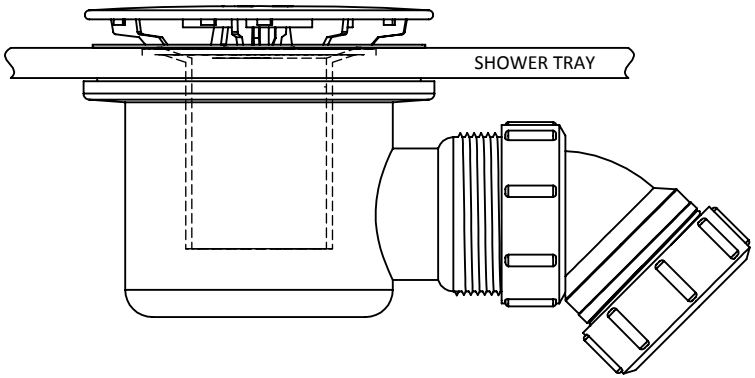
After Care: Regular maintainance is essentail to retaining a high performance flow rate. Remove flange (E) and trap assembly (F&G) and thoroughly clean all the parts. Flush through the trap body with clean water and carefully replace the parts.